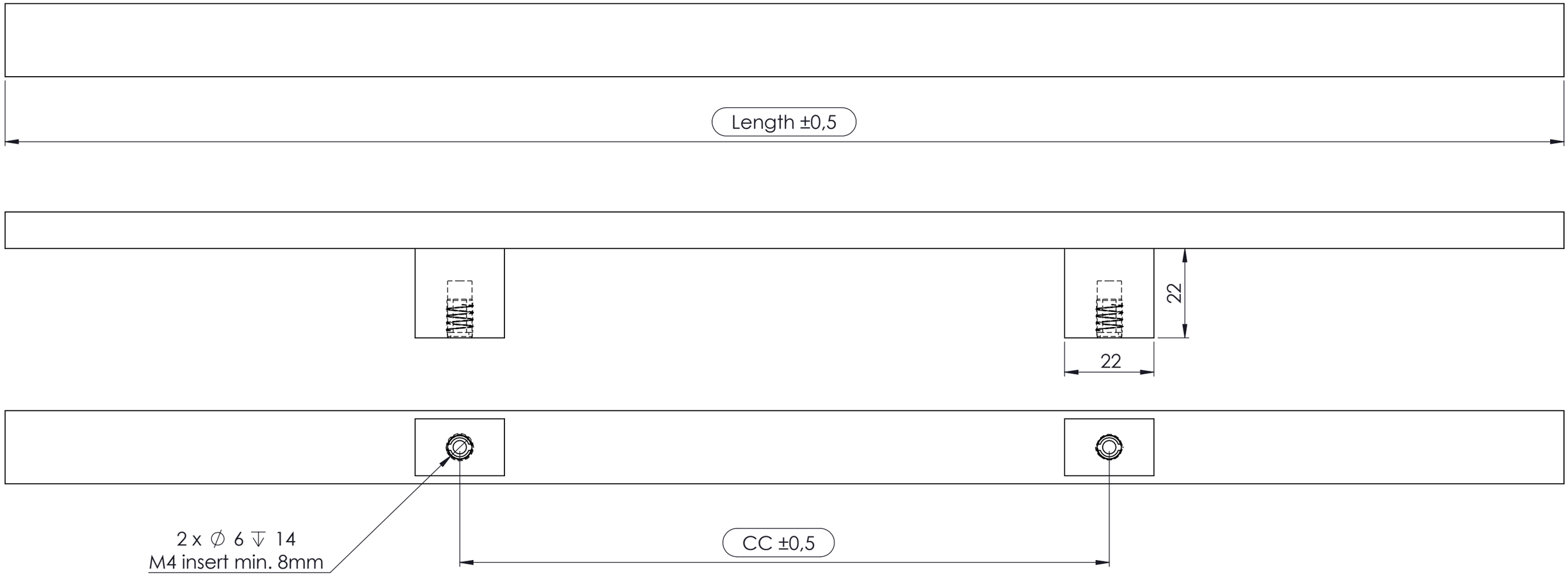

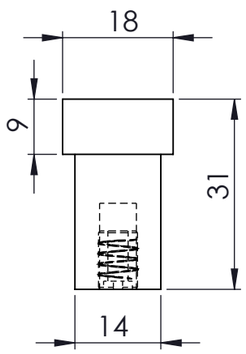

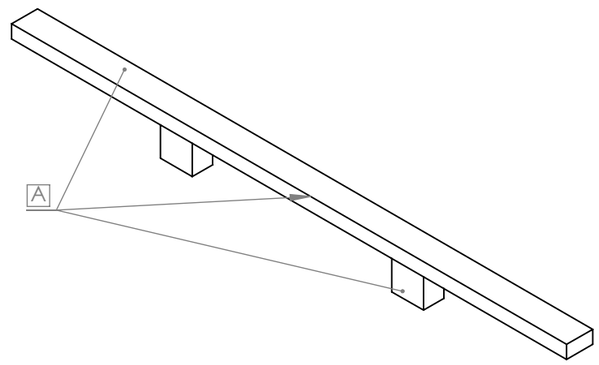

Item no.	Length	CC
117760160	384	160
1177224	448	224

Rev.:	Date:	Name:	Description:

Part name: Japan

Projection:

Sheet format: A3

Sheet: 1 of 1

Scale: 1:2

Tolerance unless otherwise specified DS/ISO 2768-1M

Linear dimensions:	0-3	3-6	6 - 30	30 - 120	120 - 400	400 - 1000	1000 - 2000
	±0,1	±0,1	±0,2	±0,3	±0,5	±0,8	±1,2

Angle: ±0,5° Radius: ±5%

Designer:

Drawn by: NLS 04-03-24

Weight:

Item no.: 117720XXX

Finish requirements (PS-004)

A = Most important surface
B = Important surface
C = Less important surface

Material: WOOD

furnipart®

Delta 2
DK-8382 Hinnerup
Phone: +45 87 64 35 00
E-mail: fp@furnipart.com

Requirements confer PS-001 Technical Specifications

COPYRIGHT: THIS DRAWING MAY NOT BE COPIED OR REPRODUCED IN ANY WAY WITHOUT DIRECT PERMISSION FROM FURNIPART A/S