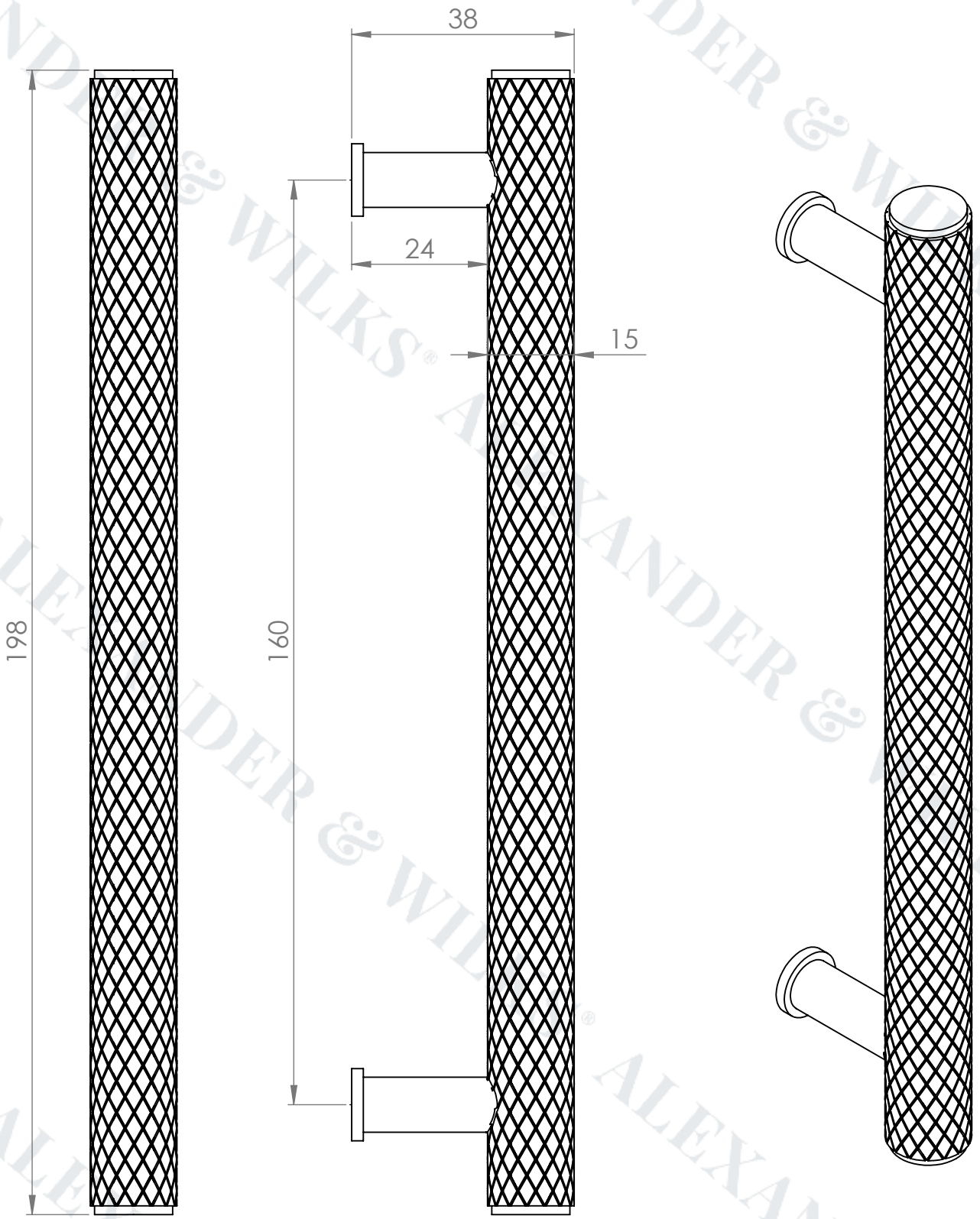

ALEXANDER & WILKS

AW809-160

This drawing is the property of Carlisle Brass Limited, all design rights reserved