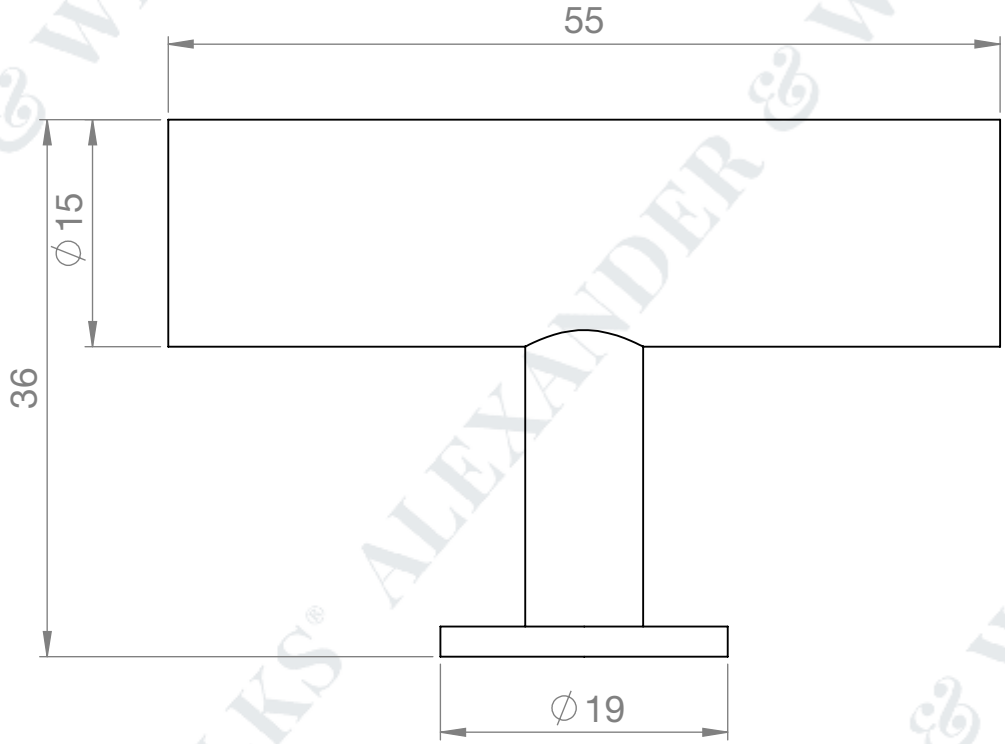

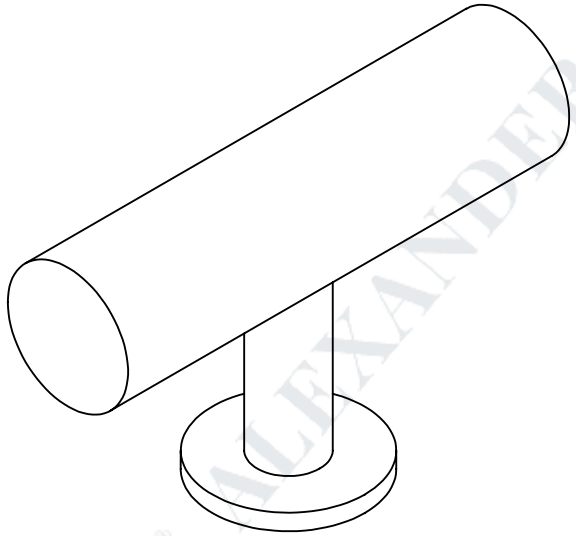

ALEXANDER & WILKS

AW804-55

This drawing is the property of Carlisle Brass Limited, all design rights reserved